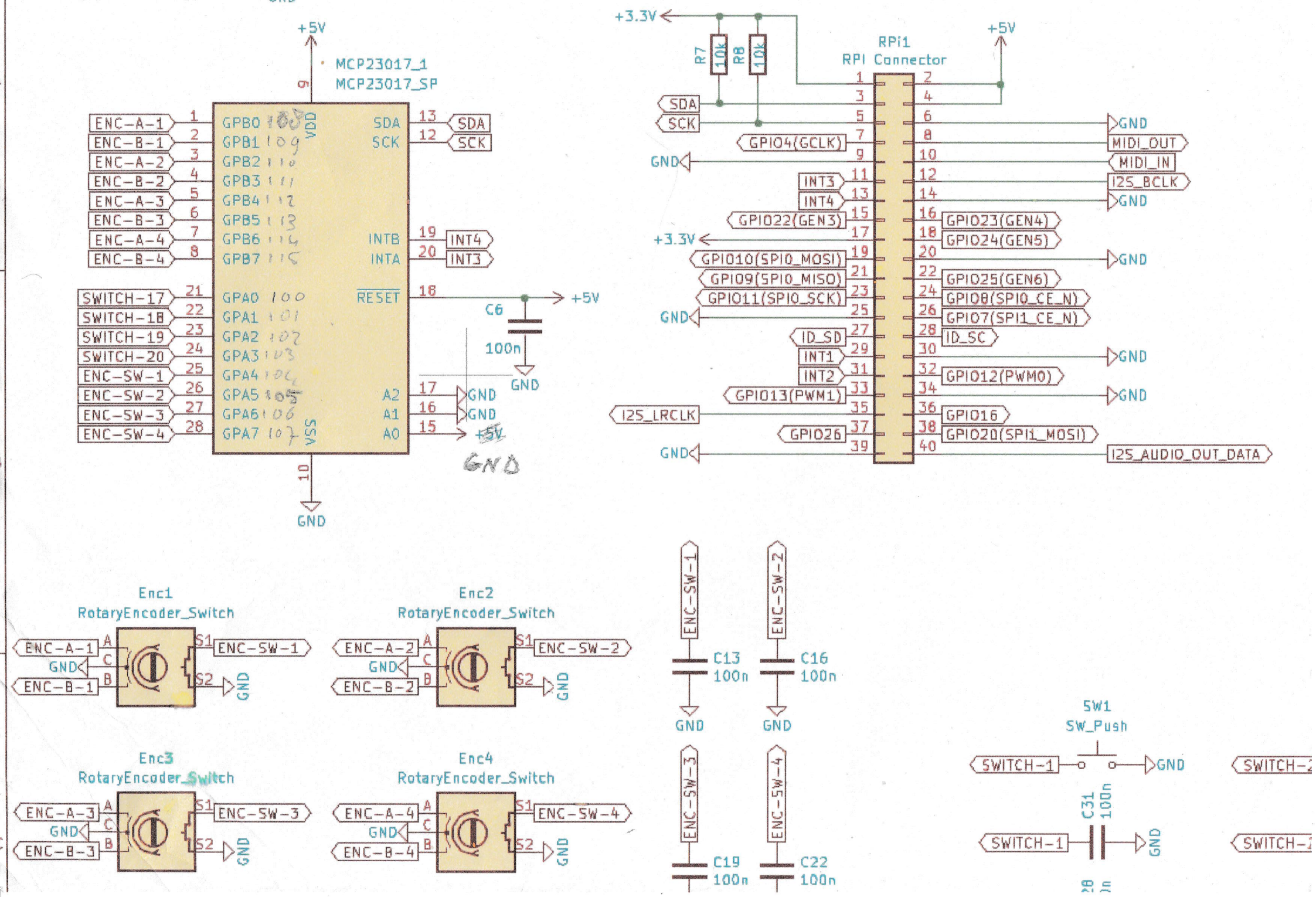
MCP23017_1
MCP23017_SP
+5V
VDD
VSS
GND
ENC-A-1
ENC-B-1
ENC-A-2
ENC-B-2
ENC-A-3
ENC-B-3
ENC-A-4
ENC-B-4
SWITCH-17
SWITCH-18
SWITCH-19
SWITCH-20
ENC-SW-1
ENC-SW-2
ENC-SW-3
ENC-SW-4
GPB0
GPB1
GPB2
GPB3
GPB4
GPB5
GPB6
GPB7
GPA0
GPA1
GPA2
GPA3
GPA4
GPA5
GPA6
GPA7
SDA
SCK
INTB
INTA
RESET
A2
A1
A0
INT4
INT3
C6
100n
+3.3V
R7
10k
R8
10k
RPi1
RPI Connector
GPIO4(GCLK)
INT3
INT4
GPIO22(GEN3)
GPIO10(SPI0_MOSI)
GPIO9(SPI0_MISO)
GPIO11(SPI0_SCK)
ID_SD
INT1
INT2
GPIO13(PWM1)
I2S_LRCLK
GPIO26
MIDI_OUT
MIDI_IN
I2S_BCLK
GPIO23(GEN4)
GPIO24(GEN5)
GPIO25(GEN6)
GPIO8(SPI0_CE_N)
GPIO7(SPI1_CE_N)
ID_SC
GPIO12(PWM0)
GPIO16
GPIO20(SPI1_MOSI)
I2S_AUDIO_OUT_DATA
Enc1
RotaryEncoder_Switch
Enc2
RotaryEncoder_Switch
Enc3
RotaryEncoder_Switch
Enc4
RotaryEncoder_Switch
C13
100n
C16
100n
C19
100n
C22
100n
SW1
SW_Push
SWITCH-1
C31
100n