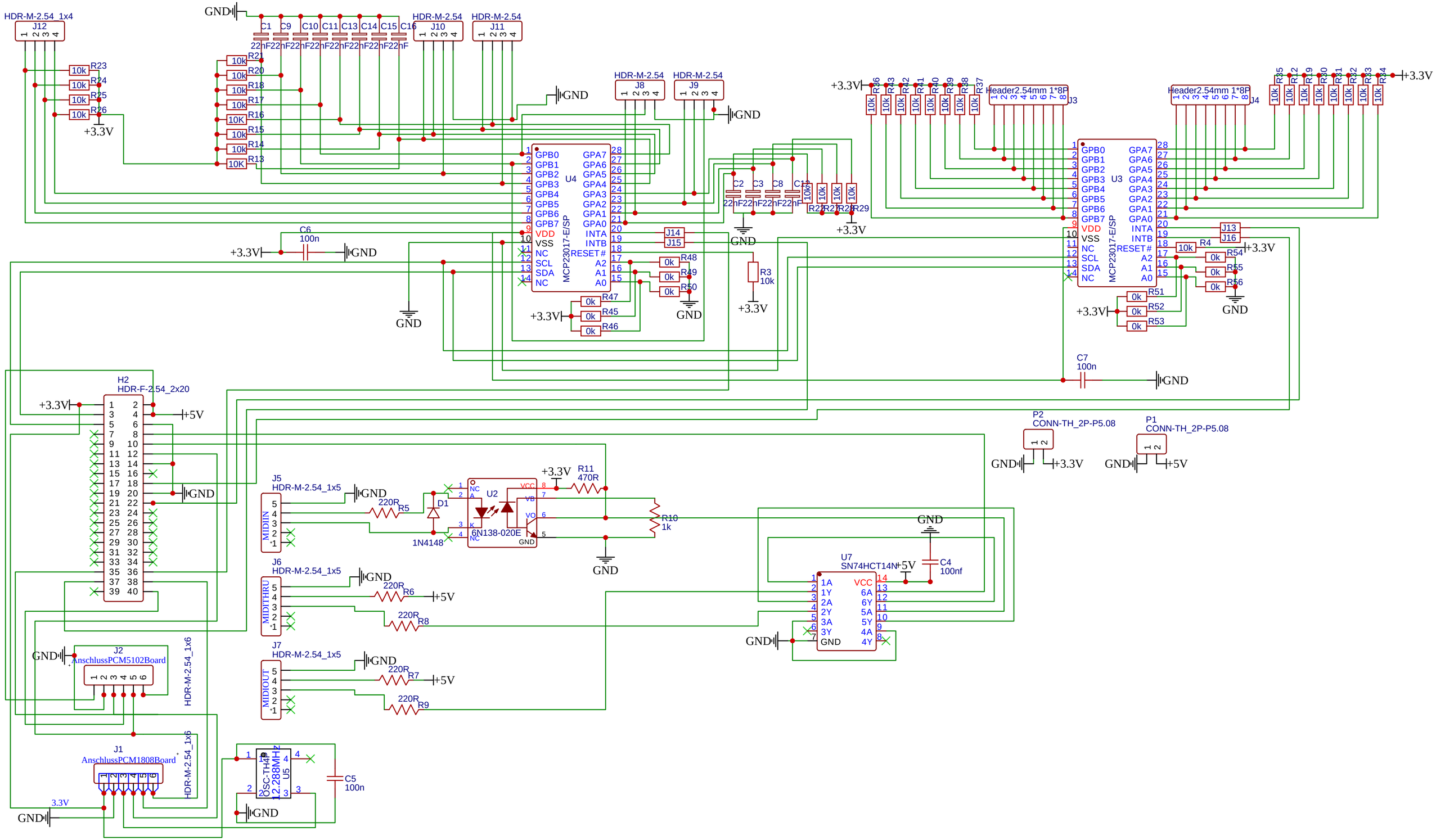
HDR-M-2.54_1x4
J12
GND
C1 C9 C10 C11 C13 C14 C15 C16
22nF
HDR-M-2.54
J10
J11
R21 R20 R18 R17 R16 R15 R14 R13
10k
R23 R24 R25 R26
+3.3V
J8
J9
U4
MCP23017-E/SP
GPB0 GPB1 GPB2 GPB3 GPB4 GPB5 GPB6 GPB7 VDD VSS NC SCL SDA NC
GPA7 GPA6 GPA5 GPA4 GPA3 GPA2 GPA1 GPA0 INTA INTB RESET# A2 A1 A0
C6
100n
J14
J15
R48 R49 R50
0k
R47 R45 R46
C2 C3 C8 C12
R27 R28 R29
R3
10k
U3
Header2.54mm 1*8P
J3
J4
R36 R43 R42 R41 R40 R39 R38 R37
R35 R12 R19 R30 R31 R32 R33 R34
J13
J16
R4
R54 R55 R56
R51 R52 R53
C7
100n
H2
HDR-F-2.54_2x20
+5V
P2
CONN-TH_2P-P5.08
P1
CONN-TH_2P-P5.08
J5
HDR-M-2.54_1x5
MIDIIN
220R
R5
D1
1N4148
U2
6N138-020E
NC
A
K
VCC
VB
VO
GND
R11
470R
R10
1k
J6
MIDITHRU
R6
R8
J7
MIDIOUT
R7
R9
U7
SN74HCT14N
1A 1Y 2A 2Y 3A 3Y GND
VCC 6A 6Y 5A 5Y 4A 4Y
C4
100nf
J2
AnschlussPCM5102Board
HDR-M-2.54_1x6
J1
AnschlussPCM1808Board
3.3V
OSC-TH4P
12.288MHz
U5
C5
100n